THIS DRAWING IS UNPUBLISHED. RELEASED FOR PUBLICATION - ,- .
© COPYRIGHT - BY TYCO ELECTRONICS CORPORATION. ALL INTERNATIONAL RIGHTS RESERVED.

LOC	DIST
—	—

REVISIONS

P	LTR	DESCRIPTION	DATE	DWN	APVD
	P	REV PER ECO-09-025771	14DEC09	PY	DW

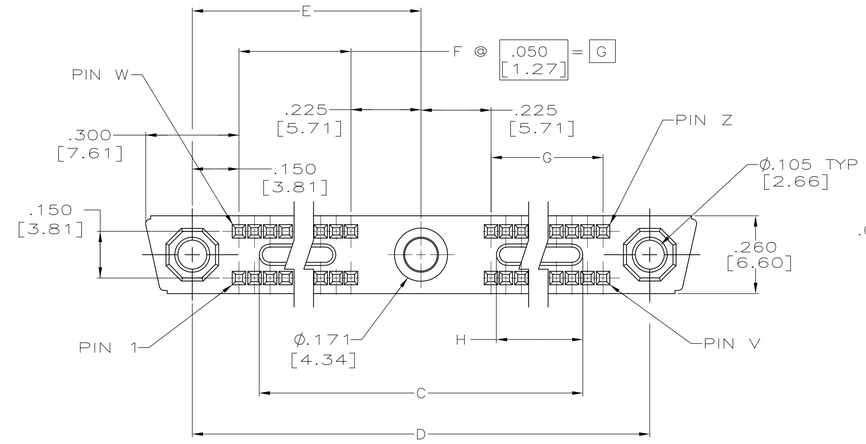

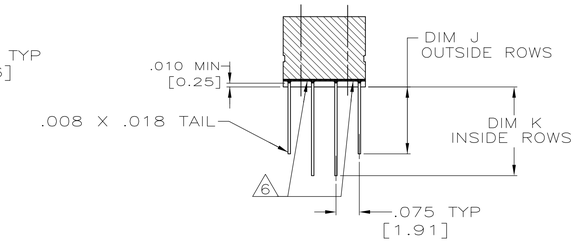

SECTION X—X

1. AMP, AMP PART NO. AND DATE CODE MARKED IN THIS APPROXIMATE AREA.
2. NUMBERS INDICATING END POSITIONS MARKED THIS SIDE ONLY.
3. MEETS ALL APPLICABLE REQUIREMENTS OF MIL-C-55302.
4. FINISH: .000050[0.0012] GOLD PER MIL-G-45204 OVER NICKEL PER QQ-N-290 IN CONTACT AREA. REMAINDER OF CONTACT TIN-LEAD OVER NICKEL.
5. HOUSING MATERIAL: LIQUID CRYSTAL POLYMER PER MIL-M-24519, GLCP-30F; COLOR: GRAY.
6. EPOXY IS ADDED TO BOTTOM OF HOUSING FOR INCREASED CONTACT RETENTION.
7. CONTACT MATERIAL: PHOS BRONZE PER QQ-B-750

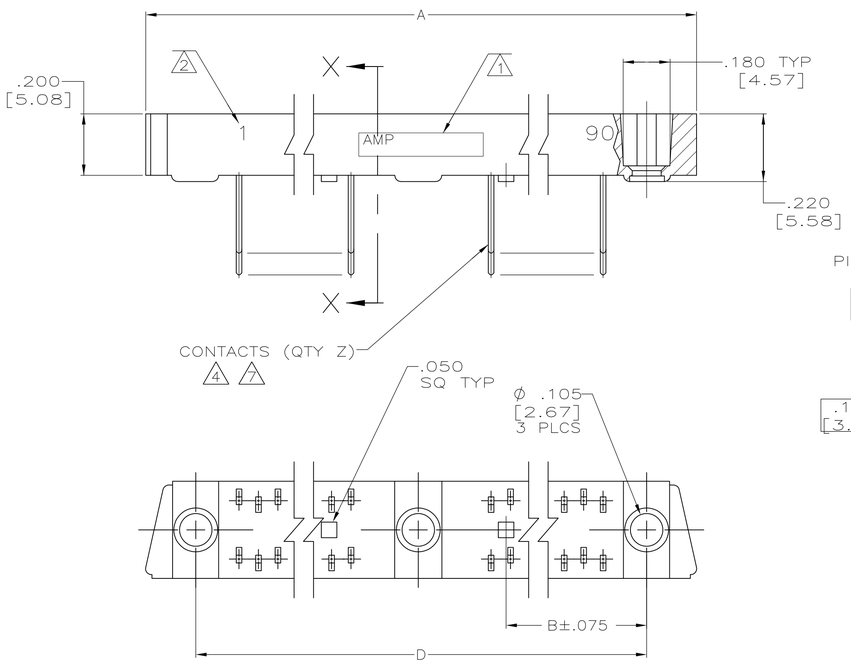

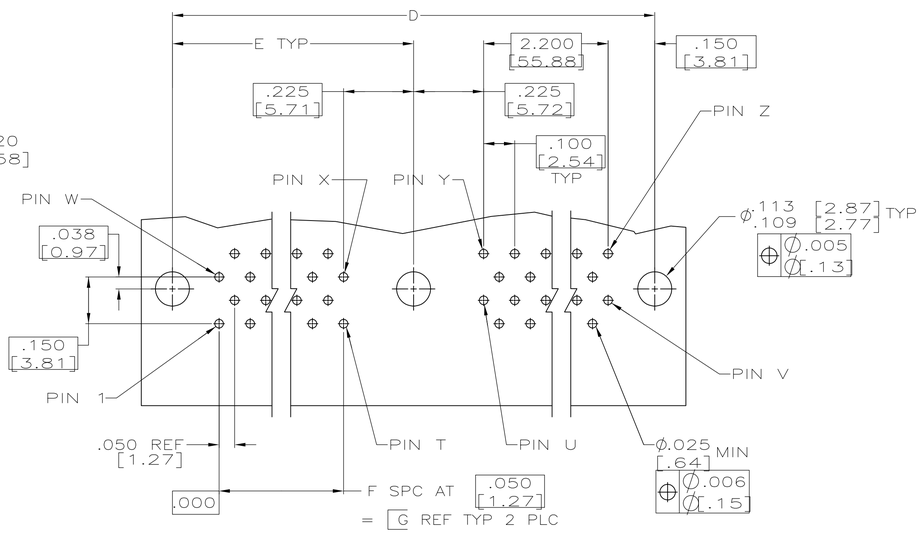

RECOMMENDED PRINTED CIRCUIT BOARD LAYOUT
(CONNECTOR SIDE)
FOOT PRINT STYLE I
(SEE TABLE)

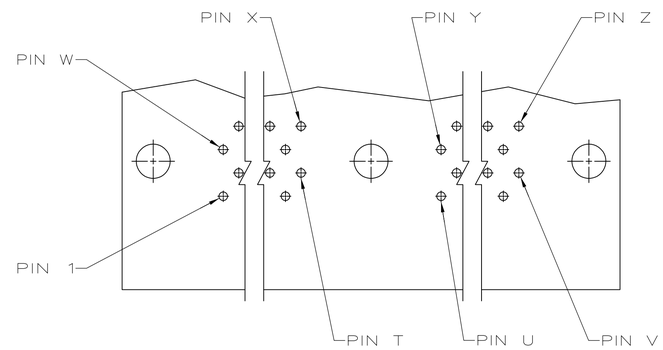

RECOMMENDED PRINTED CIRCUIT BOARD LAYOUT
(CONNECTOR SIDE)
FOOT PRINT STYLE II
(SEE TABLE)

OBS	—	I I	160	121	120	81	80	41	40	1 & 80	.190 [4.83]	.140 [3.56]	1.800 [45.72]	1.950 [49.53]	39	2.325 [59.06]	4.650 [118.11]	4.200 [106.68]	1.162 [29.51]	4.950 [125.73]	160	534179-9
	6	I I	200	151	150	101	100	51	50	1 & 100	.300 [7.62]	.230 [5.84]	2.300 [58.42]	2.450 [62.23]	49	2.825 [71.76]	5.650 [143.51]	5.200 [132.08]	1.413 [35.89]	5.950 [151.13]	200	534179-8
	6	I I	192	145	144	97	96	49	48	1 & 96	.300 [7.62]	.230 [5.84]	2.200 [55.88]	2.350 [59.69]	47	2.725 [69.22]	5.450 [138.43]	5.000 [127.00]	1.362 [34.59]	5.750 [146.05]	192	534179-7
	6	I	180	136	135	91	90	46	45	1 & 90	.300 [7.62]	.230 [5.84]	2.050 [52.07]	2.200 [55.88]	44	2.575 [65.41]	5.150 [130.81]	4.700 [119.38]	1.287 [32.69]	5.450 [138.43]	180	534179-6
	6	I	172	130	129	87	86	44	43	1 & 86	.300 [7.62]	.230 [5.84]	1.950 [49.53]	2.100 [53.34]	42	2.475 [62.87]	4.950 [125.73]	4.500 [114.30]	1.237 [31.42]	5.250 [133.35]	172	534179-5
	6	I I	160	121	120	81	80	41	40	1 & 80	.300 [7.62]	.230 [5.84]	1.800 [45.72]	1.950 [49.53]	39	2.325 [59.06]	4.650 [118.11]	4.200 [106.68]	1.162 [29.51]	4.950 [125.73]	160	534179-4
	6	I I	152	115	114	77	76	39	38	1 & 76	.300 [7.62]	.230 [5.84]	1.700 [43.18]	1.850 [46.99]	37	2.225 [56.52]	4.450 [113.03]	4.000 [101.60]	1.062 [26.97]	4.750 [120.65]	152	534179-3
	6	I	140	106	105	71	70	36	35	1 & 70	.300 [7.62]	.230 [5.84]	1.550 [39.37]	1.700 [43.18]	34	2.075 [52.71]	4.150 [105.41]	3.700 [93.98]	1.037 [26.34]	4.450 [113.03]	140	534179-2
	6	I	132	100	99	67	66	34	33	1 & 66	.300 [7.62]	.230 [5.84]	1.450 [36.83]	1.600 [40.64]	32	1.975 [50.17]	3.950 [100.33]	3.500 [88.90]	.987 [25.07]	4.250 [107.95]	132	534179-1
	REMARKS	FOOT PRINT STYLE	Z	Y	X	W	V	U	T	CONTACT IDENT NUMBERS	K±.015 [±0.38]	J±.015 [±0.38]	H	G	F	E	D	C	B	A	NUMBER OF CONTACTS	PART NUMBER

THIS DRAWING IS A CONTROLLED DOCUMENT.

DIMENSIONS: INCHES

TOLERANCES UNLESS OTHERWISE SPECIFIED:
0 PLC ± –
1 PLC ± –
2 PLC ± –
3 PLC ± .010 [0.13]
4 PLC ± –
ANGLES ± 0°30'

MATERIAL 5 – 7

FINISH 4 –

DWN T. ALEXANDER 9-16-94
CHK D. GUTTER 9-20-94
APVD D. GUTTER 9-20-94

PRODUCT SPEC —
APPLICATION SPEC —
WEIGHT —

Tyco Electronics
Tyco Electronics Corporation
Harrisburg, PA 17105-3608

NAME
RECEPTACLE ASSEMBLY, EXTENDED MINI-BOX WITH LOW FORCE CONTACTS, SPECIAL
—

SIZE	CAGE CODE	DRAWING NO	RESTRICTED TO
A1	00779	C-534179	—

CUSTOMER DRAWING

SCALE	SHEET	OF	REV
4:1	1	1	P